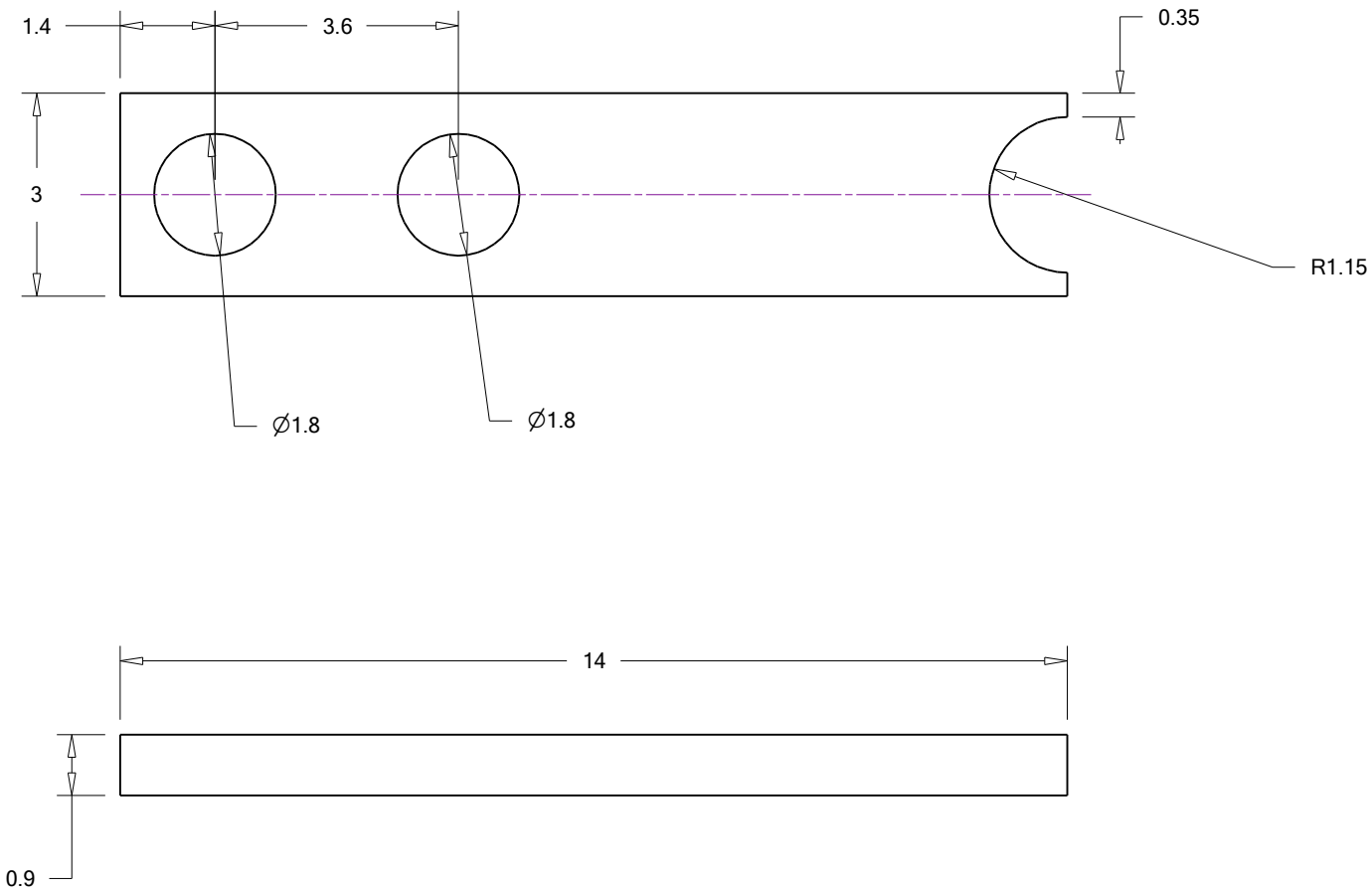


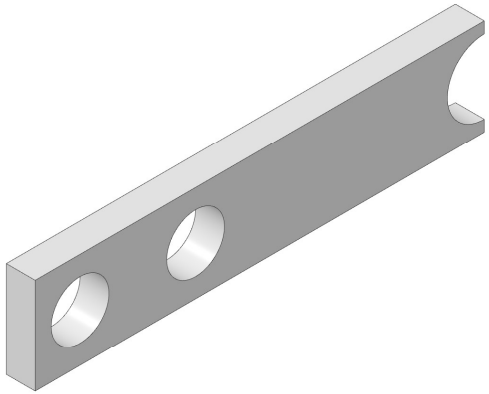

| djetronic.org | Units: mm | WIRE MOUNT | 9:1 | 31-DEC-2022 | D-JETRONIC MPS |
|---|---|---|---|---|---|