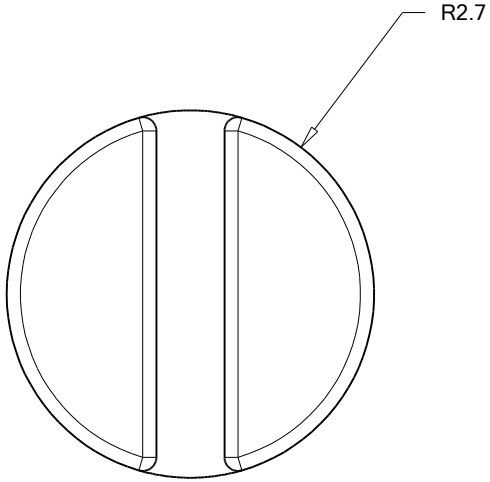

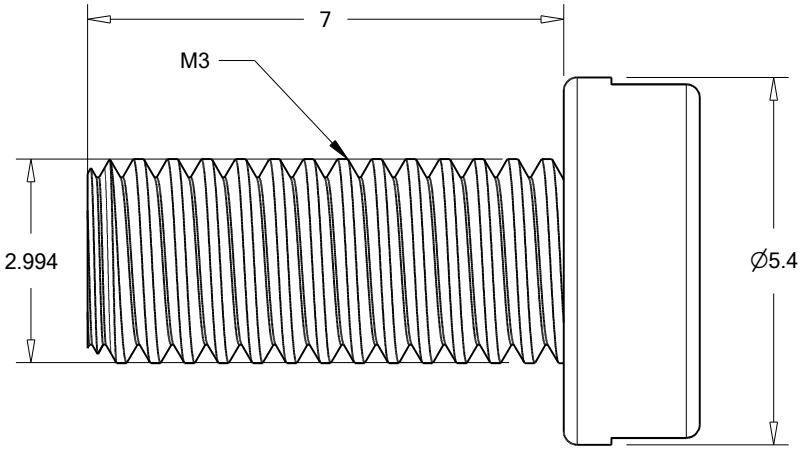

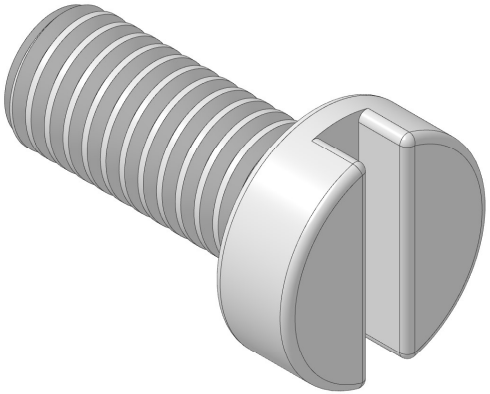

djetronic.org	Units: mm	LEAF SPRING / CORE GUIDE MOUNTING BOLT	9:1	31-DEC-2022	D-JETRONIC MPS